Instruction Leaflet IL**01203001E**

Effective April 2011
Supersedes IL01203001EH06 7/08

Installation Instructions for Series C F-Frame 310+ Electronic Circuit Breaker Types FDE, HFDE, FDCE

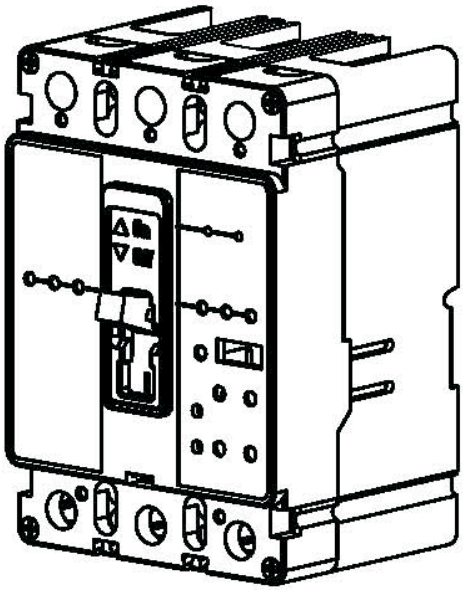

Contents

Description **Page**
Introduction 2
Installation 2
Manual Operation 4
Inspection & Field Testing 4
Trip Unit Settings 5
Neutral Current Sensor Installation 6
FDE Zone Interlocking System 7

Powering Business Worldwide

⚠WARNING

DO NOT ATTEMPT TO INSTALL, TEST, OR PERFORM MAINTENANCE ON EQUIPMENT WHILE IT IS ENERGIZED. DEATH OR SEVERE INJURY AND/ OR SUBSTANTIAL PROPERTY DAMAGE CAN RESULT FROM CONTACT WITH ENERGIZED EQUIPMENT. BEFORE INSPECTING THE CIRCUIT BREAKER IN AN ELECTRICAL SYSTEM, MAKE SURE THE CIRCUIT BREAKER IS SWITCHED TO THE OFF POSITION AND THAT THERE IS NO VOLTAGE PRESENT WHERE WORK IS TO BE PERFORMED. ALWAYS FOLLOW GENERALLY ACCEPTED SAFETY PROCEDURES.

EATON IS NOT LIABLE FOR THE MISAPPLICATON OR MISINSTALLATION OF ITS PRODUCTS.

The user is cautioned to observe all recommendations, warnings and cautions relating to the safety of personnel and equipment, as well as all general and local health and safety laws, codes and procedures.

The recommendations and information contained herein are based on Eaton experience and judgement, but should not be considered to be all-inclusive or covering every application or circumstance which may arise. If any questions arise, contact Eaton for further information or instructions.

1. Introduction

The F-Frame electronic Circuit Breaker (Figure 1) is available in the 3-pole style with three rated currents (80A, 160A, 225A) and four electronic tripping options. For single-phase ground fault applications, both the supply and return must be routed through the Breaker. Throughout this document, the electronic circuit breaker will be referred to as a breaker. The circuit breaker is equipped with an electronic sensing and tripping mechanism which makes the inverse time delay release independently of ambient temperature. A thermal memory is incorporated which prevents power operation immediately after an overload trip.

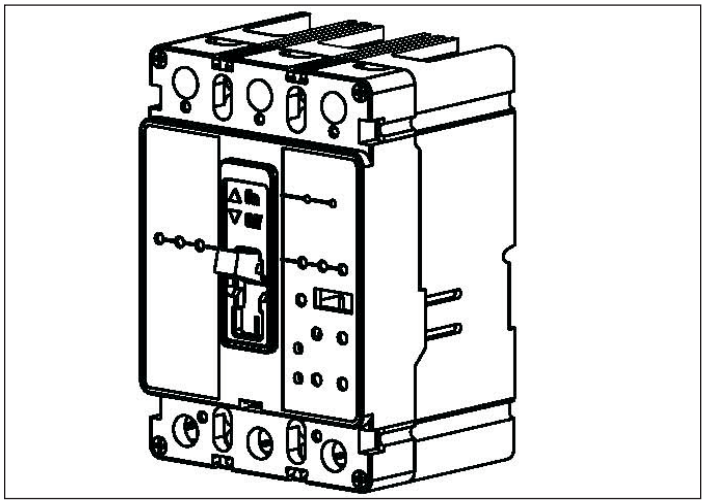

Figure 1. F-Frame 310 + Electronic Circuit Breaker.

The electronic options include with or without ground fault and a linear of I^2t response for the short delay time. The LS and LSG (catalog suffixes 33 and 35) have an I^2t response for the short delay time function. The LSI and LSIG (catalog suffixes 32 and 36) have a flat response for the short delay time function. The LSG and LSIG include the ground fault function. The LSI and LSIG configurations also have a zone interlock option which are specified with the 32ZG and 36ZG catalog suffixes. These breakers are designed to comply with Underwriters Laboratories, Inc. Standard UL-489 and Canadian Standards Association CSA-22.2.

2. Installation

The installation procedure consists of inspecting and mounting the breaker, connecting and torquing the line and load terminations, and attaching terminal shield or barriers when supplied. To install the breaker, perform the following steps.

NOTICE

THE BREAKERS ARE FACTORY SEALED. ACCESSORY INSTALLATION SHOULD BE DONE BEFORE THE BREAKER IS MOUNTED AND CONNECTED. Mounting hardware and unmounted terminations (where required) are supplied in separate packages.

Make sure that the breaker is suitable for the installation by comparing nameplate data with system requirements. Inspect the breaker for completeness and check for damage before mounting.

⚠WARNING

BEFORE MOUNTING THE BREAKER IN AN ELECTRICAL SYSTEM, MAKE SURE THERE IS NO VOLTAGE PRESENT WHERE WORK IS TO BE PERFORMED. THE VOLTAGES IN ENERGIZED EQUIPMENT CAN CAUSE INJURY OR DEATH.

Depending on the equipment configuration, the breaker can be mounted using different styles of hardware. The following steps describe how to mount the breaker using standard hardware. When special hardware is needed with the electrical operator, for example, the instruction leaflet describing the accessory also describes the special mounting arrangements.

NOTICE

BEFORE MOUNTING THE BREAKER, CHECK TO SEE IF THE TERMINATION DEVICES SHOULD BE INSTALLED FIRST. SEE TERMINATION INSTRUCTIONS.

To mount the breaker, perform the following steps:

1. For individual mounting panels, make sure the mounting panel is predrilled using bolt drilling plan (Figure 2). For panel board mounting, only load end support mounting holes are required. For deadfront cover application, make sure panel cover is cut out to correct escutcheon dimensions (Figure 3).

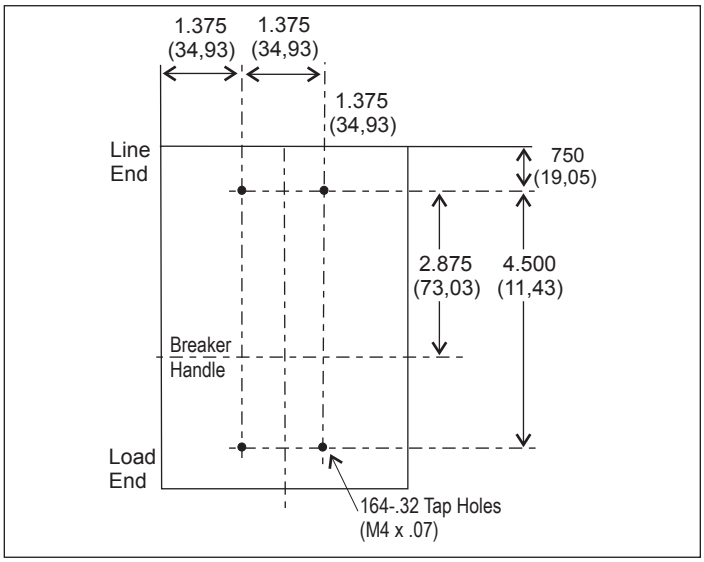

Figure 2. Breaker Mounting Bolt Drilling Plan.

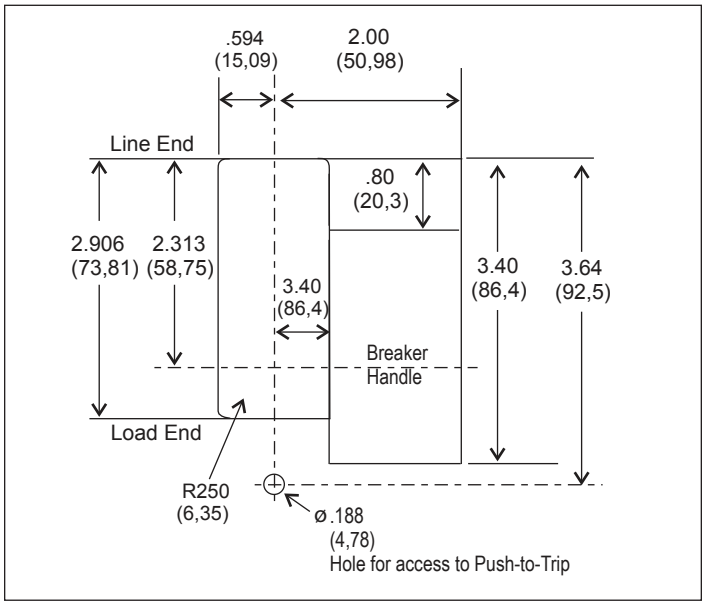

Figure 3. Breaker Escutcheon Dimensions.

2. If the breaker includes factory installed internal accessories, make sure accessory wiring can be reached when the breaker is mounted.
3. Position the breaker on the mounting surface.
4. Install mounting screws, washers and nuts. Tighten screws firmly, but do not exceed 28 pound-inches (3.16 N.m.)

If an optional terminal end cover is to be installed with the breaker (usually line end only), it must be positioned before the cable is connected to terminals.

⚠ CAUTION

WHEN ALUMINUM CONDUCTORS ARE USED, THE APPLICATION OF A SUITABLE JOINT COMPOUND IS RECOMMENDED TO REDUCE THE POSSIBILITY OF TERMINAL OVERHEATING. TERMINAL OVERHEATING CAN CAUSE NUISANCE TRIPPING AND DAMAGE TO THE BREAKER.

After mounting the breaker, line and load terminals and accessory leads should be connected (see accessory schematic diagram on side of breaker).

NOTICE

IF TERMINAL SHIELD OR INTERPHASE BARRIERS ARE TO BE INSTALLED ON THE BREAKER, INSTALL THEM AFTER THE TERMINALS ARE CONNECTED.

- If required, install terminal shield on breaker cover with mounting screws provided.
- If required, install an interphase barrier by sliding barrier into dovetail grooves between terminals.
- After the breaker is installed, check all mounting hardware and terminal connecting hardware for correct torque loading. Torque values for line/load terminals are provided in Tables 1, 2 and 3.

Table 1. Terminal Types.

Terminal Catalog No.	Terminal Body Material	Screw Head Type	AWG Wire Range	Metric Wire Range	Wire Type	Torque Value lb. in. (N-m)
3TA225FD *	Aluminum	3/16 Socket Hex	#4-40	25-95	Cu/Al	120 (13.6)
3TA225FDM *	Aluminum	5mm Socket Hex	#4-40	25-95	Cu/Al	120 (13.6)
3TA225FDK * †	Aluminum	5/16 Socket Hex	#6-300	16-150	Cu/Al	275 (31)
3TA100FD *	Aluminum	Slotted	#14-1/0	2.5-50	Cu/Al	See Table 2.
3TA50FB *	Aluminum	Slotted	#14-#4	2.5-16	Cu/Al	See Table 2
3T100FB *	Steel	Slotted	#14-1/0	2.5-50	Cu/Al	See Table 2
3T150FB *	Stainless Steel	Slotted	#4-4/0	25-95	Cu only	See Table 2

Note: Terminal wire connectors are UL listed for standard wire size as defined in UL 486A & UL 486B.
* Package of 3.
† Individual terminal identified as TA225FD1.

Table 2. Terminal Torque Values of Slotted Head.

Metric Wire Range.	Torque Value (N-m)	AWG Wire Range	Torque Value Lb in.
2.5-6	3.96	#14-10	35
10	4.52	#8	40
16-25	5.06	#6-4	45
35-95	5.65	#3-4/0	50

Table 3. Bolted Connections (Keeper Nut or End Cap).

Termination Catalog No.	Screw Head Type)	Nut Thread Size	Torque Value Lb in. (N-m)
KPR1A/KPR1AM	User Supplied	10-32/M5	35-(4.0)
KPEKxxx	Slotted	10-32/M5	35-(4.0)

3. Manual Operation

Manual operation of the breaker is controlled by the handle and the PUSH-TO-TRIP button. The breaker has three indicated handle positions, two of which are displayed on the cover with raised lettering to indicate ON and OFF. The sliding handle barrier has color-coded indicators; red = ON, green = OFF, and white = TRIPPED. The international symbol for ON and OFF, I/O is also displayed (see Figure 4).

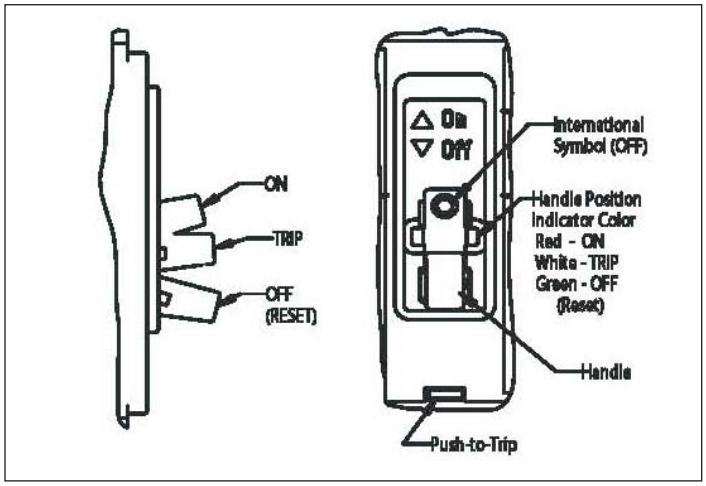

Figure 4. Breaker Manual Controls.

Circuit Breaker Reset

After tripping, the breaker is reset by moving the breaker handle to the extreme OFF position.

NOTICE

IN THE EVENT OF AN OVERLOAD TRIP, WAIT TWO MINUTES BEFORE SWITCHING TO ON. THE WAIT WILL CLEAR A DESIGNED THERMAL DELAY.

4. Inspection & Field Testing

Although Series C molded case breakers are designed to provide years of almost maintenance-free operation, breakers in service should be inspected periodically. The following procedure describes how to inspect and test a breaker in service.

⚠WARNING

DO NOT ATTEMPT TO INSTALL, TEST OR PERFORM MAINTENANCE ON EQUIPMENT WHILE IT IS ENERGIZED. DEATH OR SEVERE INJURY CAN RESULT FROM CONTACT WITH ENERGIZED EQUIPMENT. BEFORE INSPECTING THE CIRCUIT BREAKER IN AN ELECTRICAL SYSTEM, MAKE SURE THE CIRCUIT BREAKER IS SWITCHED TO THE OFF POSITION AND THAT THERE IS NO VOLTAGE PRESENT WHERE WORK IS TO BE PERFORMED.

SPECIAL ATTENTION SHOULD BE PAID TO REVERSE FEED APPLICATIONS TO ENSURE NO VOLTAGE IS PRESENT.

⚠CAUTION

VERIFY THE CLEANING AGENTS OR SOLVENTS USED TO CLEAN THE BREAKER ARE SUITABLE FOR THE JOB. SOME COMMERCIAL CLEANING AGENTS WILL DAMAGE THE NAME PLATES OR MOLDED PARTS.

Inspection Procedure

1. Remove dust, dirt, soot, grease and/or moisture from the surface of the breaker with a lint-free dry cloth, brush or vacuum cleaner. Do not blow debris into the breaker. If contamination is found, look for the source and eliminate the problem.
2. Switch the breaker to ON and OFF several times to verify that the mechanical linkages are free and do not bind. If mechanical linages are not free, replace the breaker.
3. Press the TRIP-TO-PUSH button to mechanically trip the breaker. Trip, reset and switch the breaker ON several times. If the mechanism does not rest each time the breaker is tripped, replace the breaker.
4. Check the base, cover and operating handle for cracks, chipping and discoloration. The breaker should be replaced if cracks or severe discoloration is found.
5. Check terminals and connectors for looseness or signs of overheating. Overheating will show as discoloration, melting or blistering of conductor insulation, or as pitting or melting of conductor surfaces due to arcing. If there is no evidence of overheating or looseness, do not disturb or tighten the connections. If there is evidence of overheating, terminations should be cleaned or replaced. Before reenergizing the breaker, all terminations and cables should be refurbished to original installation conditions.
6. Check the breaker mounting hardware. Tighten, if necessary.
7. Check the area where the breaker is installed for any safety hazards, including personal safety and fire hazards. Exposure to certain types of chemical can cause deterioration of electrical connections.

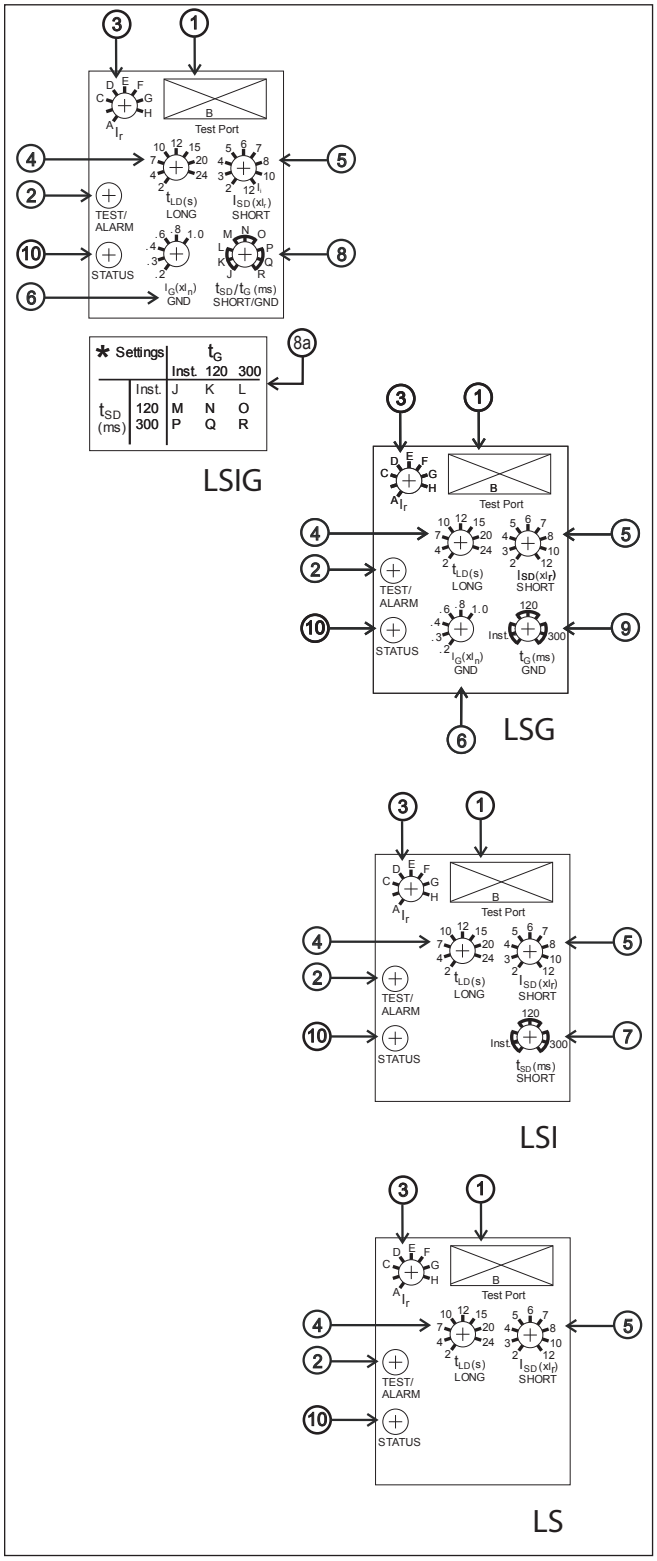

Figure 5. Trip Unit Settings.

5. Trip Unit Settings

1. **Test Port** - A test port is built into each trip unit to allow use of a functional test kit. The test kit performs a test of the Long Delay, Short delay Ground Fault functions.
2. **Test LED** - To be used with a no trip functional test. This LED is a dual function light. As previously stated, the LED is used as a no trip indicator when using the test port. In normal modes, this LED indicates a high load alarm. It will light If the continuous current is 85% of the I_r Setting and must be present for a 38 second duration.
3. **I_r - Continuous current setting** - In accordance with standards requirements, the trip unit initiates a trip of the circuit breaker within 2 hours for an overload of 135% and will trip as a function of I²t for higher currents. Continuous current values for each lettered setting are indicated by the chart displayed on the right side of the trip unit label.
4. **t_{LD} -** The number of seconds required to trip @ 6x I_r., i.e. I_r -250 A, t_{LD} - 2 sec load current - 1500 A (6X). The breaker will trip in 2 seconds.
5. **I_{SD} -** Setting in multiples of I_r. For short circuit conditions that exceed the short delay pick-up setting, the trip unit initiates a trip after a predetermined delay.
6. The **I_G - (xIN) switch** is the ground fault pick-up switch. It is used on the LSIG & LSG styles to set the ground fault pick-up as a percentage of I (frame current). For example, a 250 A frame with an **I_G** (xIN) setting of 0.4 will provide a ground fault pick-up at 90 A.
7. For the **LSI style**, the short delay time is a flat response determined by the tSD switch settings of INST, the LED is used as a no trip indicator when using the 120 ms, or 300 ms. For the LS styles, the short delay time is an I²t function.
8. For the **LSIG style**, the short delay is a flat response determined by the t_{sd}/t_g switch settings of INST, 120 ms or 300 ms. This switch is a dual switch that also determines the ground fault time settings of INST, 120 ms or 300 ms. For example, if the t_{sd}/t_g switch is set at position J, then both short delay time and ground fault time are at INST flat. As another example, set the t_{sd}/t_g switch at position L; the short delay flat time is INST and the ground fault flat time is at 300 ms. The LSIG label (see above 8a) should be used in conjunction with the t_{sd}/t_g switch to set any one of nine possible combinations of short delay and ground fault flat times. The LSIG label should be applied to the left side Breaker Frame Nameplate.
9. For the **LSG style**, the short delay time is an I²t function while the ground fault flat time is set by the t switch.
10. **Status LED** - A green status light indicates the operational status of the trip unit. If the load current exceeds approximately 20% of the maximum current rating (IN) the breaker, the status light will blink on and off once each second.

6. Neutral Current Sensor Installation

Ground fault trip units are supplied from the factory with pigtail lead connections for a neutral current sensor (white and grey wires). A neutral current sensor is available, but must be ordered separately.

Ground Fault Trip Units detect ground fault currents through Residual Sensing. They are not designed to use source ground or zero sequence ground fault sensing methods. If the system neutral is grounded, but no phase to neutral loads are used, the neutral current sensor is not necessary. In that case, the white and grey leads on the trip unit should be cut off before installation.

If the system neutral is grounded and phase to neutral loads are used, then the neutral current sensor (see Figure 6) must be used. It should be connected to the breaker according to the diagram in Figure 7. It has the same turns ratio as the phase current sensors in the trip unit sensors in the trip unit.

NOTICE

THE POLARITY OF THE SENSOR CONNECTIONS IS CRITICAL. ALWAYS OBSERVE THE POLARITY MARKINGS ON THE INSTALLATION DRAWINGS. THE POLARITY MARKINGS ARE IDENTIFIED AS WHITE DOTS ON THE TRANSFORMERS. TO INSURE CORRECT GROUND FAULT EQUIPMENT PERFORMANCE, CONDUCT FIELD TESTS TO COMPLY WITH NATIONAL ELECTRIC CODE REQUIREMENTS UNDER ARTICLE 230-95 (C).

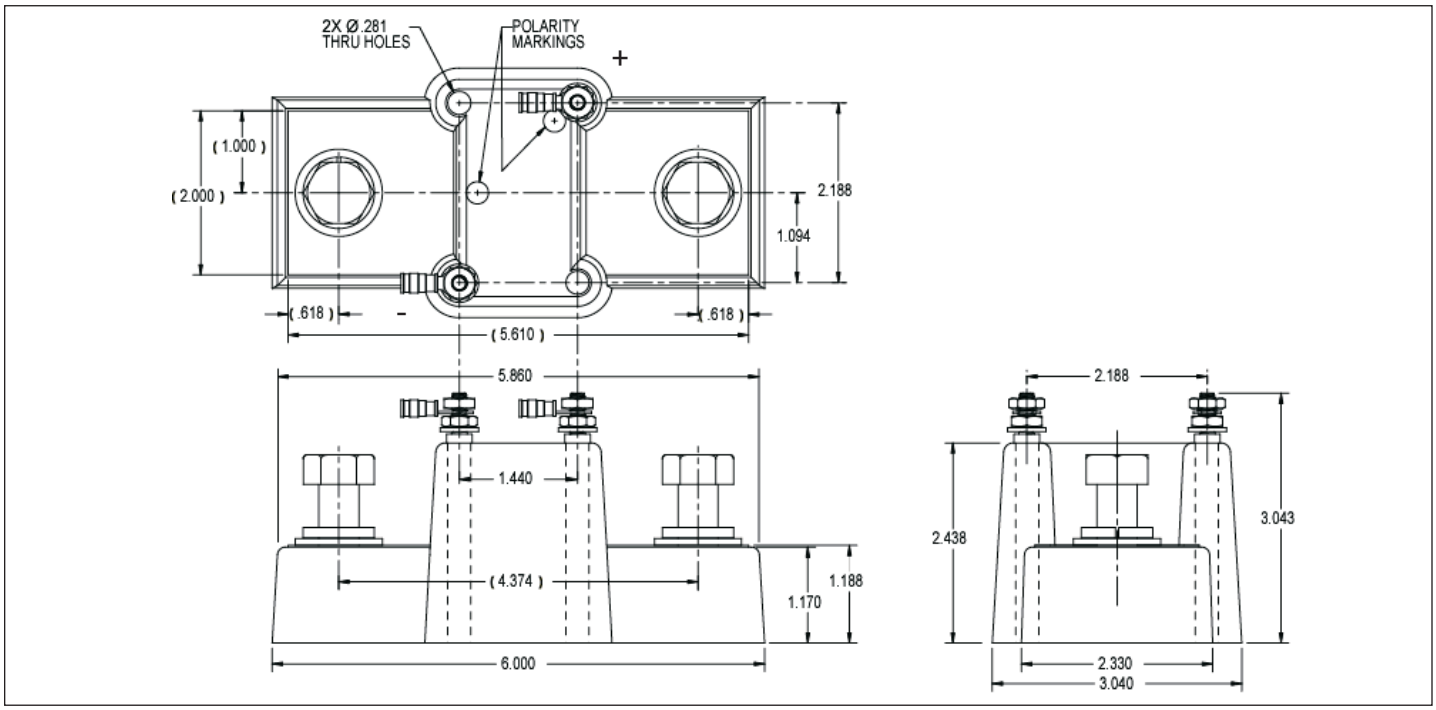

Figure 6. Neutral Sensor Dimensions.

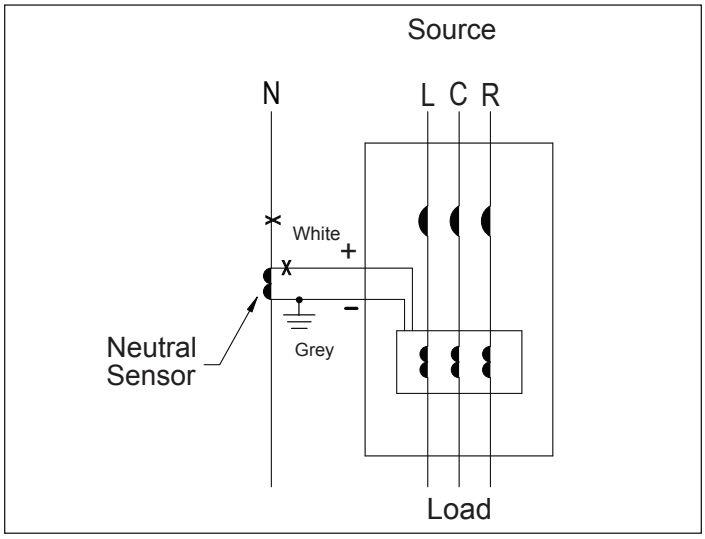

Figure 7. Neutral Sensor Diagram.

7. FDE Zone Interlocking System

Zone selective interlocking is provided for the short delay and the ground fault delay tripping functions for improved system protection. The FDE Trip Unit zone selective interlocking feature is compatible with OPTIM and Digitrip Trip Units, Models 510 and higher. It will also be compatible with Series G LG Trip Units when available, as well as with other FDE breakers.

The zone selective interlocking feature is a means of communications over a pair of wires between two or more compatible trip units. Zone Selective interlocking will localize the effects of an interruption and provide positive coordination between circuit breakers as a response to different fault conditions and locations.

Three wires exit the beaker with the following color code and function:

- White with Black Stripe = Zone Out
- White with Red Stripe = Zone In
- Black = Common

An example of a Zone Interlock system would be a 225A FDE breaker used as the upstream breaker and an 80A FDE breaker as the downstream breaker. The Zout wire (white/black stripe) of the 80A breaker would be connected to the Zin wire (white/red stripe) of the 225A breaker. Both common wires (black) must be connected. More breakers could be added in a similar fashion to form a zone of protection.

For faults outside the zone of protection the trip unit on the circuit breaker nearest the fault sends an interlocking signal (Zout) to the trip unit of the upstream circuit breaker (Zin). This interlocking signal restrains immediate tripping of the upstream circuit breaker until its programmed coordination time is reached. This, zone selective interlocking applied correctly can reduce damage due to circuit or ground fault conditions. A table of the settings of two breakers versus the outcomes [both trip, Downstream (Dn) trips], of the breakers is indicated in Table 4 for the conditions mentioned in the table heading.

Table 4. Settings of Two Breakers Versus the Outcomes.

		Upstream		
		INST	120 ms	300 ms
Downstream	INST	Both 43 ms	Dn 43 ms	Dn 43 ms
	120 ms	Both 52 ms	Dn 52 ms	Dn 52 ms
	300 ms	Both 43 ms	Dn 43 ms	Dn 43 ms

Note: A single FDE breaker with the Zone Interlocking feature enabled will not trip at the programmed time settings, unless Self Interlocked. To be Self Interlocked, the Zout wire is connected to the Zin wire.

The instructions for installation, testing, maintenance, or repair herein are provided for the use of the product in general commercial applications and may not be appropriate for use in nuclear applications. Additional instructions may be available upon specific request to replace, amend, or supplement these instructions to qualify them for use with the product in safety-related applications in a nuclear facility.

The information, recommendations, descriptions, and safety notations in this document are based on Eaton's experience and judgment with respect to Retrofitting of Power Breakers. This instructional literature is published solely for information purposes and should not be considered all-inclusive. If further information is required, you should consult an authorized Eaton sales representative.

The sale of the product shown in this literature is subject to the terms and conditions outlined in appropriate Eaton selling policies or other contractual agreement between the parties. This literature is not intended to and does not enlarge or add to any such contract. The sole source governing the rights and remedies of any purchaser of this equipment is the contract between the purchaser and Eaton.

NO WARRANTIES, EXPRESSED OR IMPLIED, INCLUDING WARRANTIES OF FITNESS FOR A PARTICULAR PURPOSE OR MERCHANTABILITY, OR WARRANTIES ARISING FROM COURSE OF DEALING OR USAGE OF TRADE, ARE MADE REGARDING THE INFORMATION, RECOMMENDATIONS, AND DESCRIPTIONS CONTAINED HEREIN. In no event will Eaton be responsible to the purchaser or user in contract, in tort (including negligence), strict liability or otherwise for any special, indirect, incidental or consequential damage or loss whatsoever, including but not limited to damage or loss of use of equipment, plant or power system, cost of capital, loss of power, additional expenses in the use of existing power facilities, or claims against the purchaser or user by its customers resulting from the use of the information, recommendations and description contained herein.

Eaton Corporation
Electrical Group
1000 Cherrington Parkway
Moon Township, PA 15108
United States
877-ETN-CARE (877-386-2273)
Eaton.com

© 2011 Eaton Corporation
All Rights Reserved
Printed in USA
Publication No. IL01203001E / TBG000539
Part No. IL01203001EH07
April 2011

Powering Business Worldwide